CHAIN – *CATENA* DIN 8187		Type – *Tipo*						Size *Taglia*	Type - Tipo		BELT
		XVR	XOV	XRO	XZN	AZN	XZK		XRP	XRU	*Max belt width Largh. max. cinghia*
ISO	Pitch *Passo*	Pag. D-5	Pag. D-5	Pag. D-6	Pag. D-7	Pag. D-7	Pag. D-8		Pag. D-9	Pag. D-9	
05-B1	8mm	XVR 10-0S		XRO 10-0S				**10**	XRP 1	XRU 1	30
06-B1	3/8“x7/32“	XVR 10-1S	XOV 10-1S	XRO 10-1S				**10**			
06-B1	3/8“x7/32“				XZN 20-1S	AZN 20-1S	XZK 20-1S	**20**			
06-B1	3/8“x7/32“				XZN 30-1S	AZN 30-1S	XZK 30-1S	**30**			
08-B1	1/2"x5/16“	XVR 20-2S	XOV 20-2S	XRO 20-2S				**20**	XRP 2/3	XRU 2/3	40
08-B1	1/2"x5/16“	XVR 30-2S	XOV 30-2S	XRO 30-2S	XZN 30-2S	AZN 30-2S	XZK 30-2S	**30**	XRP 2/3	XRU 2/3	40
10-B1	5/8“x3/8“	XVR 30-3S	XOV 30-3S	XRO 30-3S	XZN 30-3S	AZN 30-3S		**30**			
10-B1	5/8“x3/8“				XZN 40-3S	AZN 40-3S	XZK 40-3S	**40**	XRP 4	XRU 4	55
12-B1	3/4"x7/16“	XVR 30-4S	XOV 30-4S	XRO 30-4S				**30**			
12-B1	3/4"x7/16“	XVR 40-4S	XOV 40-4S	XRO 40-4S			XZK 40-4S	**40**			
16-B1	1“x17,02mm	XVR 40-5S		XRO 40-5S			XZK 40-5S	**40**			
05-B2	8mm	XVR 10-0D		XRO 10-0D				**10**			
06-B2	3/8“x7/32“	XVR 10-1D	XOV 10-1D	XRO 10-1D				**10**			
06-B2	3/8“x7/32“						XZK 20-1D	**20**			
06-B2	3/8“x7/32“						XZK 30-1D	**30**			
08-B2	1/2"x5/16“	XVR 20-2D	XOV 20-2D	XRO 20-2D				**20**			
08-B2	1/2"x5/16“	XVR 30-2D	XOV 30-2D	XRO 30-2D			XZK 30-2D	**30**			
10-B2	5/8“x3/8“	XVR 30-3D	XOV 30-3D	XRO 30-3D				**30**			
10-B2	5/8“x3/8“						XZK 40-3D	**40**			
12-B2	3/4"x7/16“	XVR 30-4D	XOV 30-4D	XRO 30-4D				**30**			
12-B2	3/4"x7/16“	XVR 40-4D	XOV 40-4D	XRO 40-4D			XZK 40-4D	**40**			
16-B2	1“x17,02mm	XVR 40-5D		XRO 40-5D			XZK 40-5D	**40**			
06-B3	3/8“x7/32“	XVR 20-1T		XRO 20-1T				**20**			
06-B3	3/8“x7/32“						XZK 30-1T	**30**			
08-B3	1/2"x5/16“	XVR 30-2T		XRO 30-2T				**30**			
08-B3	1/2"x5/16“						XZK 40-2T	**40**			
10-B3	5/8“x3/8“	XVR 40-3T		XRO 40-3T			XZK 40-3T	**40**			
12-B3	3/4"x7/16“	XVR 40-4T		XRO 40-4T			XZK 40-4T	**40**			
16-B3	1“x17,02mm	XVR 40-5T		XRO 40-5T				**40**			

Blue codes s on request / Codici in blu a richiesta

HOW TO USE THE HOLE J IN PX AND PX-R / *COME UTILIZZARE IL FORO J NEI PX E PX-R*

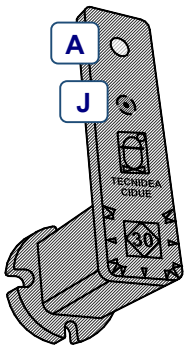

fig. 1

The tensioner is provided with the “A” hole only. The “J” hole is indicated with a reference mark.
Il tenditore si presenta con il solo foro A. Il foro J è indicato con un centrino.

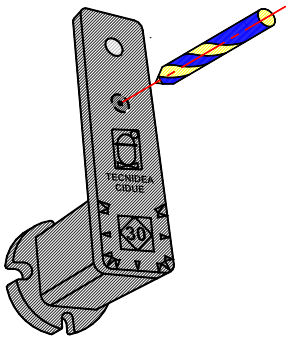

fig. 2

With a simple drilling operation on the reference mark You can make the J hole.
Con una semplice operazione di foratura in corrispondenza del centrino si realizza il foro J.

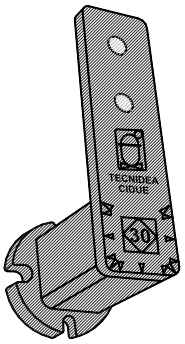

fig. 3

Once removed the plastic, the hole is ready to be used.
Rimossa la plastica dal foro J, il foro risulta subito utilizzabile.

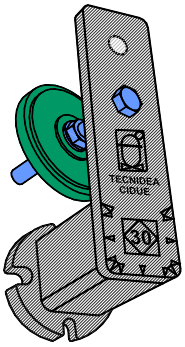

fig. 4

The KIT assembly on the hole J is the same of the hole A.
Il montaggio del KIT sul foro J è il medesimo che per il foro A.

Polyethylene sliding block Type: **XVR** / *Pattino in polietilene – Tipo:* ***XVR***

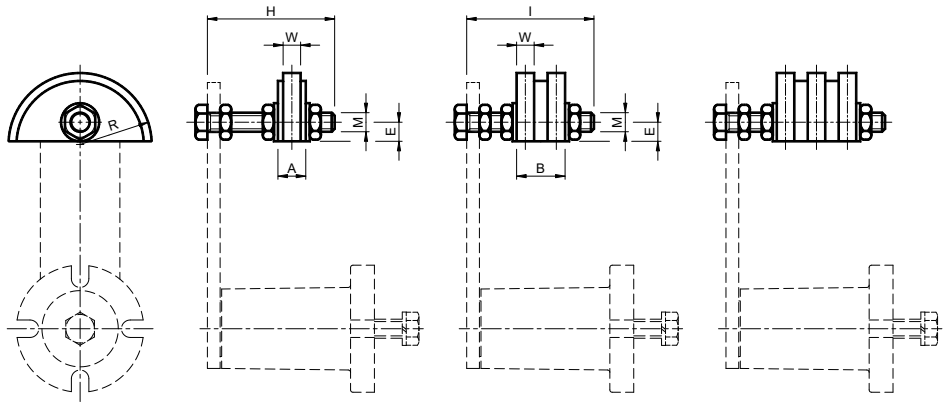

S. **D.** **T.**

On request
A richiesta

MATERIALS High molecular density polyethylene. Bolts and nuts are made of stainless steel.
USE Semi-circular sliding block suitable for reduced distance between centres or for installations close to the pinion.
Operating speed ≤ 20 m/min.
Operating temperature ≤70°C.

MATERIALI *Polietilene ad alta densità molecolare. Bulloneria in acciaio inossidabile.*
IMPIEGO *Profilo semicircolare adatto per piccoli interassi o per montaggi vicino al pignone.*
Velocità di lavoro ≤20 m/min.
Temperatura di lavoro ≤70°C.

Type *Tipo*	S Cod.N°	D Cod.N°	Chain *Catena*	Type *Tipo*	S Cod.N°	D Cod.N°	Size *Taglia*	A	B	E	G	H	I	M	P	Q	R	W	Weight *Peso* in [kg] S.	Weight *Peso* in [kg] D.
XVR 10-0	RE011975	RE011995	05-B				10	10,0	12,0	10		45	45	M8			35	2,5	0,09	0,10
XVR 10-1	RE011976	RE011996	06-B	**XOV 10-1**	RE013001	RE013021	10	10,0	18,0	10	10,2	45	45	M8	75	40	35	5,0	0,09	0,10
XVR 20-2	RE011979	RE011999	08-B	**XOV 20-2**	RE013004	RE013024	20	14,0	20,5	10	13,9	55	55	M10	96	50	35	7,0	0,10	0,11
XVR 30-2	RE011979	RE012000	08-B	**XOV 30-2**	RE013004	RE013025	30	14,0	20,5	10	13,9	55	60	M10	96	50	35	7,0	0,11	0,12
XVR 30-3	RE011981	RE012001	10-B	**XOV 30-3**	RE013006	RE013026	30	16,5	25,0	12	16,6	55	70	M10	126	65	45	9,0	0,12	0,14
XVR 30-4	RE011983	RE012003	12-B	**XOV 30-4**	RE013008	RE013028	30	17,5	30,0	12	19,5	60	70	M10	148	74	45	11,0	0,16	0,15
XVR 40-4	RE011984	RE012004	12-B	**XOV 40-4**	RE013009	RE013029	40	17,5	30,0	12	19,5	80	80	M12	148	74	45	11,0	0,20	0,22
XVR 40-5	RE011986	RE012006	16-B				40	18,0	47,0	20		80	90	M12			55	16,0	0,22	0,31

Polyethylene sliding block – Type: **XOV** / *Pattino in polietilene – Tipo:* ***XOV***

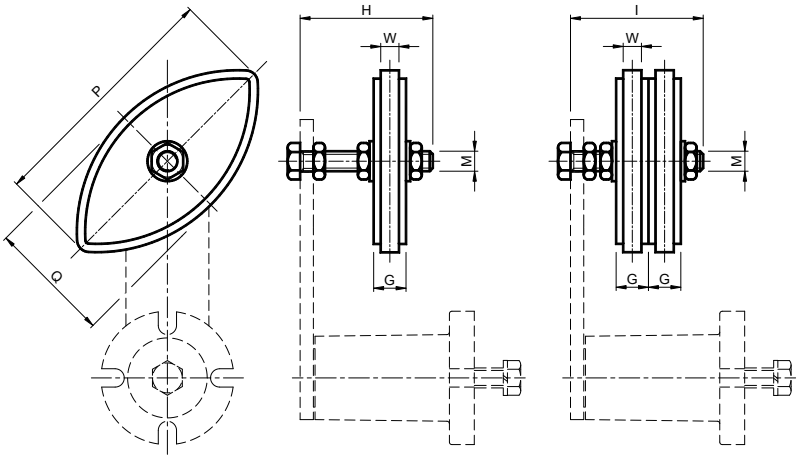

S. **D.**

MATERIALS High molecular density polyethylene. Bolts and nuts are made of stainless steel.
USE Semi-circular sliding block suitable for middle-size and large distance between centres.
Operating speed ≤ 20 m/min.
Operating temperature ≤70°C.

MATERIALI *Polietilene ad alta densità molecolare. Bulloneria in acciaio inossidabile.*
IMPIEGO *Profilio semicircolare adatto per medi e grandi interassi.*
Velocità di lavoro ≤20 m/min.
Temperatura di lavoro ≤70°C.