CHAIN – CATENA DIN 8187								Size *Taglia*	BELT - *CINGHIA*			
		Type – *Tipo*							Type - *Tipo*		Max belt width *Largh. max. cinghia*	Type *Tipo*
ISO	Pitch *Passo*	VR Pag. C-21	OVR Pag. C-21	RO Pag. C-22	ZN Pag. C-23	ZI Pag. C-23	ZK Pag. C-24		RP Pag. C-26	RU Pag. C-27		SP Pag. C-28
05-B1	8mm	VR 10-0S	OVR 10-0S	RO 10-0S				**10**	RP 1	RU 1	30	
06-B1	3/8“x 7/32“	VR 10-1S	OVR 10-1S	RO 10-1S				**10**				
06-B1	3/8“x 7/32“				ZN 20-1S	ZI 20-1S	ZK 20-1S	**20**				
06-B1	3/8“x 7/32“				ZN 30-1S	ZI 30-1S	ZK 30-1S	**30**				
08-B1	1/2"x 5/16“	VR 20-2S	OVR 20-2S	RO 20-2S				**20**	RP 2/3	RU 2/3	40	
08-B1	1/2"x 5/16“	VR 30-2S	OVR 30-2S	RO 30-2S	ZN 30-2S	ZI 30-2S	ZK 30-2S	**30**	RP 2/3	RU 2/3	40	SPZ
10-B1	5/8“x 3/8“	VR 30-3S	OVR 30-3S	RO 30-3S	ZN 30-3S	ZI 30-3S		**30**				
10-B1	5/8“x 3/8“				ZN 40-3S	ZI 40-3S	ZK 40-3S	**40**				SPA
12-B1	3/4"x 7/16“	VR 30-4S	OVR 30-4S	RO 30-4S	ZN 30-4S	ZI 30-4S		**30**				
12-B1	3/4"x 7/16“	VR 40-4S	OVR 40-4S	RO 40-4S	ZN 40-4S	ZI 40-4S	ZK 40-4S	**40**	RP 4	RU 4	55	SPB
12-B1	3/4"x 7/16“				ZN 50-4S	ZI 50-4S	ZK 50-4S	**50**				
16-B1	1“x 17,02mm	VR 40-5S		RO 40-5S	ZN 40-5S	ZI 40-5S		**40**				
16-B1	1“x 17,02mm				ZN 50-5S	ZI 50-5S	ZK 50-5S	**50**	RP 5	RU 5	85	
20-B1	1“1/4x 3/4“	VR 50-6S		RO 50-6S				**50**				
20-B1	1“1/4x 3/4“				ZN 60-6S	ZI 60-6S	ZK 60-6S	**60**				
24-B1	1“1/2x 1“	VR 50-7S		RO 50-7S				**50**				
24-B1	1“1/2x 1“				ZN 60-7S	ZI 60-7S	ZK 60-7S	**60**	RP 6	RU 6	130	
05-B2	8mm	VR 10-0D	OVR 10-0D	RO 10-0D				**10**				
06-B2	3/8“x 7/32“	VR 10-1D	OVR 10-1D	RO 10-1D				**10**				
06-B2	3/8“x 7/32“				ZN 20-1D	ZI 20-1D	ZK 20-1D	**20**				
06-B2	3/8“x 7/32“				ZN 30-1D	ZI 30-1D	ZK 30-1D	**30**				
08-B2	1/2"x 5/16“	VR 20-2D	OVR 20-2D	RO 20-2D				**20**				
08-B2	1/2"x 5/16“	VR 30-2D	OVR 30-2D	RO 30-2D	ZN 30-2D	ZI 30-2D	ZK 30-2D	**30**				SPZ
10-B2	5/8“x 3/8“	VR 30-3D	OVR 30-3D	RO 30-3D	ZN 30-3D	ZI 30-3D		**30**				
10-B2	5/8“x 3/8“				ZN 40-3D	ZI 40-3D	ZK 40-3D	**40**				SPA
12-B2	3/4"x 7/16“	VR 30-4D	OVR 30-4D	RO 30-4D				**30**				
12-B2	3/4"x 7/16“	VR 40-4D	OVR 40-4D	RO 40-4D	ZN 40-4D	ZI 40-4D	ZK 40-4D	**40**				SPB
12-B2	3/4"x 7/16“				ZN 50-4D	ZI 50-4D	ZK 50-4D	**50**				
16-B2	1“x 17,02mm	VR 40-5D		RO 40-5D	ZN 40-5D	ZI 40-5D		**40**				
16-B2	1“x 17,02mm	VR 50-5D		RO 50-5D	ZN 50-5D	ZI 50-5D	ZK 50-5D	**50**				
20-B2	1“1/4x 3/4“	VR 50-6D		RO 50-6D				**50**				
20-B2	1“1/4x 3/4“				ZN 60-6D	ZI 60-6D	ZK 60-6D	**60/70**				
24-B2	1“1/2x 1“	VR 50-7D		RO 50-7D				**50**				
24-B2	1“1/2x 1“				ZN 60-7D	ZI 60-7D	ZK 60-7D	**60/70**				
06-B3	3/8“x 7/32“	VR 20-1T		RO 20-1T				**20**				
06-B3	3/8“x 7/32“				ZN 30-1T	ZI 30-1T	ZK 30-1T	**30**				SPZ
08-B3	1/2"x 5/16“	VR 30-2T		RO 30-2T				**30**				
08-B3	1/2"x 5/16“				ZN 40-2T	ZI 40-2T	ZK 40-2T	**40**				SPA
10-B3	5/8“x 3/8“	VR 40-3T		RO 40-3T	ZN 40-3T	ZI 40-3T	ZK 40-3T	**40**				
10-B3	5/8“x 3/8“				ZN 50-3T	ZI 50-3T	ZK 50-3T	**50**				
12-B3	3/4"x 7/16“	VR 40-4T		RO 40-4T	ZN 40-4T	ZI 40-4T		**40**				
12-B3	3/4"x 7/16“				ZN 50-4T	ZI 50-4T	ZK 50-4T	**50**				SPB
16-B3	1“x 17,02mm	VR 40-5T		RO 40-5T				**40**				
16-B3	1“x 17,02mm	VR 50-5T		RO 50-5T	ZN 50-5T	ZI 50-5T		**50**				
16-B3	1“x 17,02mm				ZN 60-5T	ZI 60-5T	ZK 60-5T	**60**				
20-B3	1“1/4x 3/4“	VR 50-6T		RO 50-6T				**50**				
20-B3	1“1/4x 3/4“				ZN 60-6T	ZI 60-6T	ZK 60-6T	**60/70**				
24-B3	1“1/2x 1“	VR 50-7T		RO 50-7T				**50**				
24-B3	1“1/2x 1“				ZN 60-7T	ZI 60-7T	ZK 60-7T	**60/70**				

Blue codes on request / Codici in blu a richiesta

Galvanized steel Roller – Type: **RU** / *Rullo in acciaio zincato – Tipo: **RU***

MATERIALS Roller, bearings and spacers are made of steel.
TREATMENTS Galvanization on metal parts. Greased bearings.
USE Belt tensioner roller.
Rollers operating temperature ≤ 100°C.

MATERIALI *Rullo, cuscinetti e distanziali in acciaio.*
TRATTAMENTI *Particolari metallici in acciaio zincato. Cuscinetti lubrificati.*
IMPIEGO *Rullo per tendicinghia.*
Temperatura di lavoro dei rulli ≤100°C.

Type *Tipo*	Cod. N°	Size *Taglia*	A	B	C	ØD	E	M	Max. speed *Velocità max.* [rpm]	Weight *Peso* [kg]
RU 1	AR070870	10	38	35	3	30	13	M 8	15000	0,16
RU 2/3	AR070872	20-30	51	45	6	40	16	M10	12000	0,37
RU 4*	AR070874	40	68	60	8	60	21	M16	9500	0,85
RU 5	AR070876	50	99	90	9	80	28	M20	6500	2,09
RU 6	AR070878	60	142	135	7	90	27	M20	6500	2,44
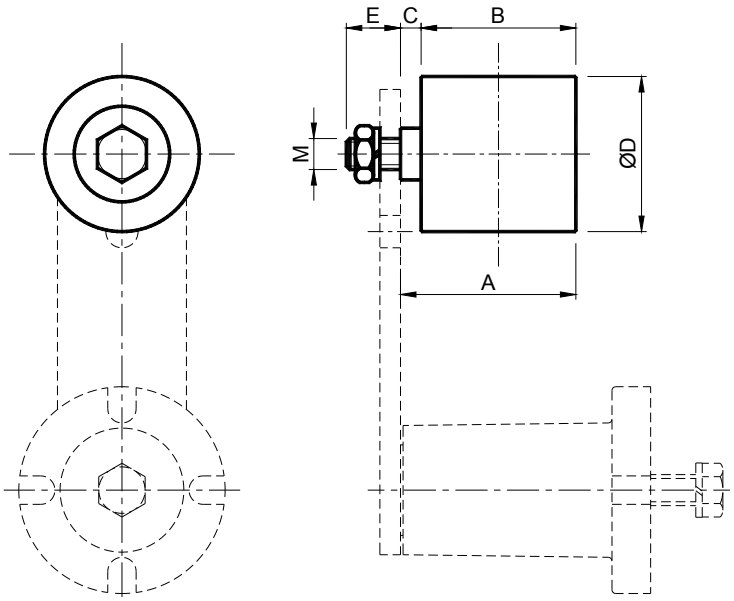
The rpm indicated in the table is approximate. The application must be considered according to the use, the service factor and working conditions.
* The customer must widen the hole on the elastic element where necessary.
Il numero di giri descritto in tabella è indicativo. L'applicazione va valutata in base al tipo d'impiego, il fattore di servizio e le condizioni di lavoro.
** Sarà a cura del cliente allargare il foro sull'elemento elastico dove necessario.*