Elementi elastici **ARCO** – Tipo: **AF (±40°)** / ***ARCO*** *Elastic elements – Type:* ***AF (±40°)***

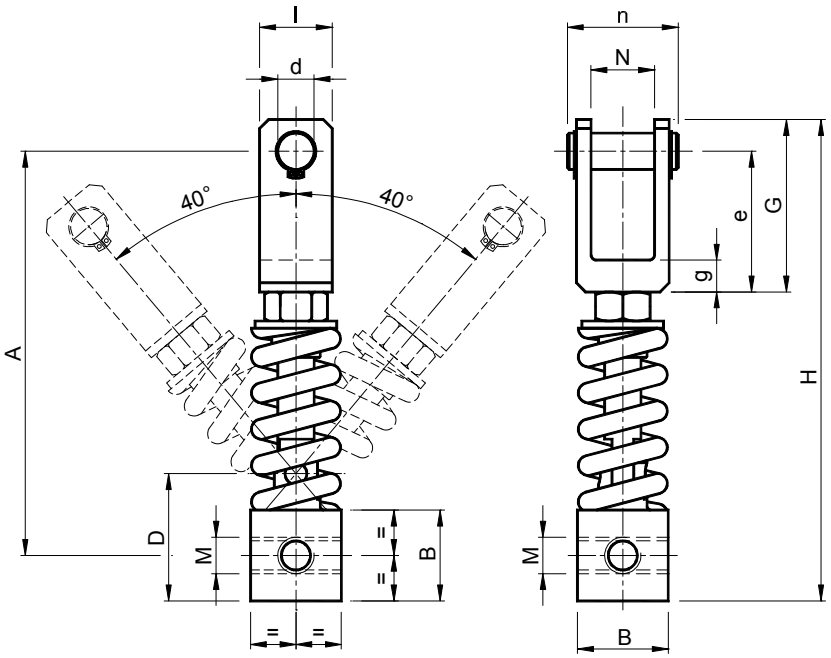

MATERIALI Acciaio. La forcella può essere in alluminio o in acciaio. Spina di rotazione in ottone.
TRATTAMENTI Zincatura bianca. La forcella è sabbiata o verniciata.
IMPIEGO Angolo di rotazione ± 40°.
Temperatura di lavoro -30°C a +120°C.

MATERIALS *Steel. The fork can be made of aluminium or steel. Rotation pin made of brass.*
TREATMENTS *White galvanization. The fork is sandblasted or painted.*
USE *Rotation angle ± 40°.*
Working temperature from -30°C to +120°C.

±40°															
Tipo *Type*	**Cod. N°**	**A**	**B**	**D**	**G**	**H**	**I**	**M**	**N**	**d**	**e**	**g**	**n**	**Newton 0°÷ 40°**	**Peso *Weight* in kg**
AF 10 S	AR070140	116.5	25	35	75	144	30	M8	19	16	60	15	40	0 ÷ 60	0.33
AF 10 D	AR070145	116.5	25	35	75	144	30	M8	37	16	60	15	60	0 ÷ 60	0.38
AF 20 S	AR070150	139.5	25	35	75	167	30	M10	19	16	60	15	40	0 ÷ 100	0.39
AF 20 D	AR070155	139.5	25	35	75	167	30	M10	37	16	60	15	60	0 ÷ 100	0.44
AF 30 S	AR070160	139.5	25	35	75	167	30	M12	19	16	60	15	40	0 ÷ 190	0.39
AF 30 D	AR070165	139.5	25	35	75	167	30	M12	37	16	60	15	60	0 ÷ 190	0.44
AF 40 S	AR070170	177.5	35	50	85	210	30	M16	19	16	70	15	45	0 ÷ 500	0.83
AF 40 D	AR070175	177.5	35	50	85	210	30	M16	37	16	70	15	65	0 ÷ 500	0.89
AF 50 S	AR070180	222.5	50	70	95	265	40	M20	19	20	77.5	17.5	45	0 ÷ 1100	2.64
AF 50 D	AR070185	222.5	50	70	95	265	40	M20	51	20	77.5	17.5	77	0 ÷ 1100	3.22
AF 60 S	AR070190	290	70	95	125	345	50	M24	34	20	105	20	60	0 ÷ 1800	6.92
AF 60 D	AR070195	290	70	95	125	345	50	M24	85	20	105	20	115	0 ÷ 1800	7.40

Elementi elastici – Tipo: **AFN (±90°)** / *ARCO Elastic elements – Type:* ***AFN (±90°)***

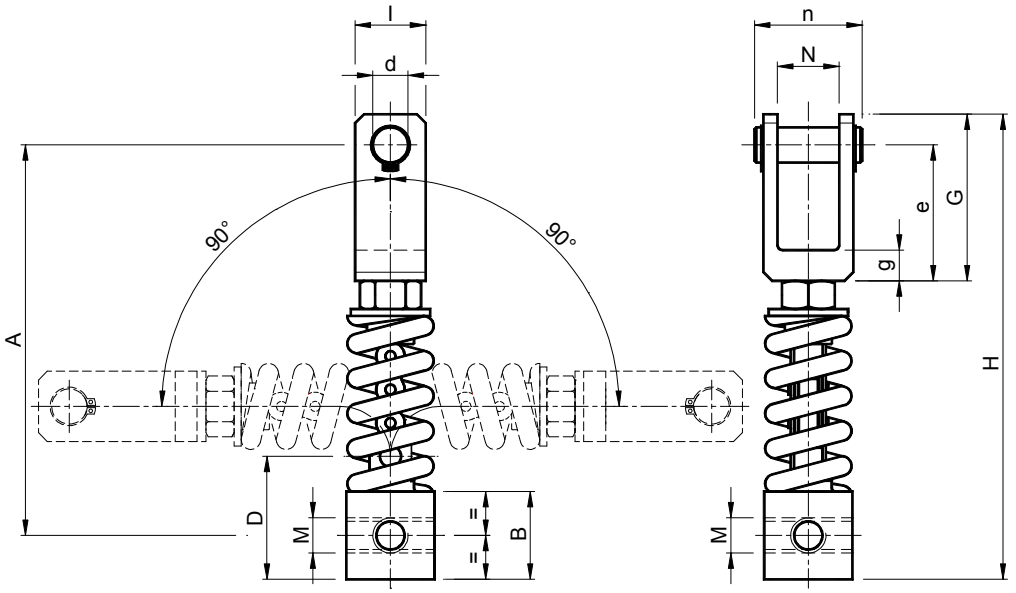

MATERIALI Acciaio. La forcella può essere in alluminio o in acciaio.
TRATTAMENTI Zincatura bianca. La forcella è sabbiata o verniciata.
IMPIEGO Angolo di rotazione ± 90°.
Temperatura di lavoro -30°C +120°C.

MATERIALS *Steel. The fork can be made of aluminium or steel.*
TREATMENTS *White galvanization. The fork is sandblasted or painted.*
USE *Rotation angle ± 90°.*
Working temperature from -30°C to +120°C.

±90°

Tipo *Type*	Cod. N°	A	B	D	G	H	l	M	N	d	e	g	n	Newton 0°÷ 90°	Peso *Weight* in kg
AFN 10 S	AR070210	116.5	25	35	75	144	30	M8	19	16	60	15	40	0 ÷ 60	0.33
AFN 10 D	AR070215	116.5	25	35	75	144	30	M8	37	16	60	15	60	0 ÷ 60	0.38
AFN 20 S	AR070220	139.5	25	35	75	167	30	M10	19	16	60	15	40	0 ÷ 100	0.39
AFN 20 D	AR070225	139.5	25	35	75	167	30	M10	37	16	60	15	60	0 ÷ 100	0.44
AFN 30 S	AR070230	139.5	25	35	75	167	30	M12	19	16	60	15	40	0 ÷ 190	0.39
AFN 30 D	AR070235	139.5	25	35	75	167	30	M12	37	16	60	15	60	0 ÷ 190	0.44
AFN 40 S	AR070240	177.5	35	50	85	210	30	M16	19	16	70	15	45	0 ÷ 500	0.83
AFN 40 D	AR070245	177.5	35	50	85	210	30	M16	37	16	70	15	65	0 ÷ 500	0.89
AFN 50 S	AR070250	222.5	50	70	95	265	40	M20	19	20	77.5	17.5	45	0 ÷ 1100	2.64
AFN 50 D	AR070255	222.5	50	70	95	265	40	M20	51	20	77.5	17.5	77	0 ÷ 1100	3.22
AFN 60 S	AR070260	290	70	95	125	345	50	M24	34	20	105	20	60	0 ÷ 1800	6.92
AFN 60 D	AR070265	290	70	95	125	345	50	M24	85	20	105	20	115	0 ÷ 1800	7.40